W1

Two Ear Clip

The use of two ear clips is an economical solution for leaktight simple hose assemblies on hoses transporting air, gas or other fluids.

The two ears give the clip extra grip and help to maintain constant pressure around the hose. The edges are rounded to avoid damage to the hose and the assembly of this clamp is fast, safe and easy. The clamping range is greater than the one ear clip, meaning that the two-ear clip can be used on larger bore hoses. The practical design of two ear clips means that they clamp firmly onto the assembly and are tamperproof once mounted.

Application Ø										
min.	max.	Part nº	A	B	C	D	E	Colour	Box Quantity (MOQ)	Outer Packing
5	7	0301210-1	7,3	4,3	6,0	11,0	0,6	SILVER-WHITE ZP	2.000	16.000
7	9	0301211-0	9,3	4,8	6,0	13,5	0,8	SILVER-WHITE ZP	1.000	16000
9	11	0301212-8	11,3	5,3	6,5	17,0	0,8	SILVER-WHITE ZP	1.000	8.000
10	12	0301209-9	12,3	5,5	6,5	18,0	0,9	SILVER-WHITE ZP	500	8.000
11	13	0301213-6	13,3	5,8	6,5	19,0	1,0	SILVER-WHITE ZP	500	8.000
13	15	0301214-4	15,3	6,3	7,0	21,5	1,1	SILVER-WHITE ZP	500	4.000
14	17	0301215-2	17,5	6,6	7,0	24,0	1,1	SILVER-WHITE ZP	500	4.000
15	18	0301216-0	18,5	7,0	7,5	25,0	1,1	SILVER-WHITE ZP	500	2.000
17	20	0301217-9	20,5	7,6	7,5	27,0	1,1	SILVER-WHITE ZP	250	2.000
18	21	0301218-7	21,5	7,9	8,0	28,0	1,1	SILVER-WHITE ZP	250	2.000
20	23	0301219-5	23,5	8,5	8,0	31,0	1,1	SILVER-WHITE ZP	250	2.000
22	25	0301220-8	25,5	9,1	8,5	33,0	1,3	SILVER-WHITE ZP	200	1.600
23	27	0301221-6	27,5	9,4	8,5	35,0	1,3	SILVER-WHITE ZP	200	1.600
25	28	0301222-4	28,5	10,0	9,0	36,0	1,3	SILVER-WHITE ZP	200	800
28	31	0301223-2	31,5	10,6	9,0	39,0	1,3	SILVER-WHITE ZP	100	800
31	34	0301224-0	34,5	11,0	9,5	42,0	1,3	SILVER-WHITE ZP	100	800
34	37	0301225-9	37,5	11,5	9,5	46,0	1,5	SILVER-WHITE ZP	100	800
37	40	0301226-7	40,5	12,0	10,0	49,0	1,5	SILVER-WHITE ZP	100	400
40	43	0301227-5	43,5	12,5	10,0	53,0	1,5	SILVER-WHITE ZP	75	600
43	46	0301228-3	46,5	13,0	10,5	56	1,5	SILVER-WHITE ZP	75	300

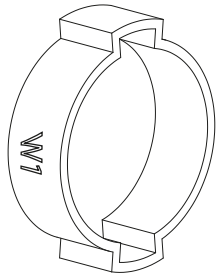
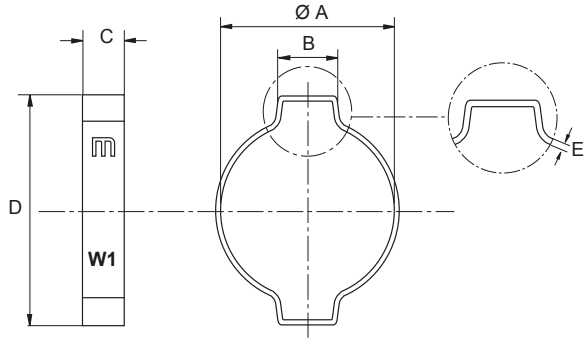
TECHNICAL INFORMATION	
MATERIAL	STEEL ST4 S DIN 1624
FINISH	SILVER-WHITE Cr3 ZINC-PLATED
CORROSION RESISTANCE	72 HOURS SALT SPRAY (ASTM B-117)